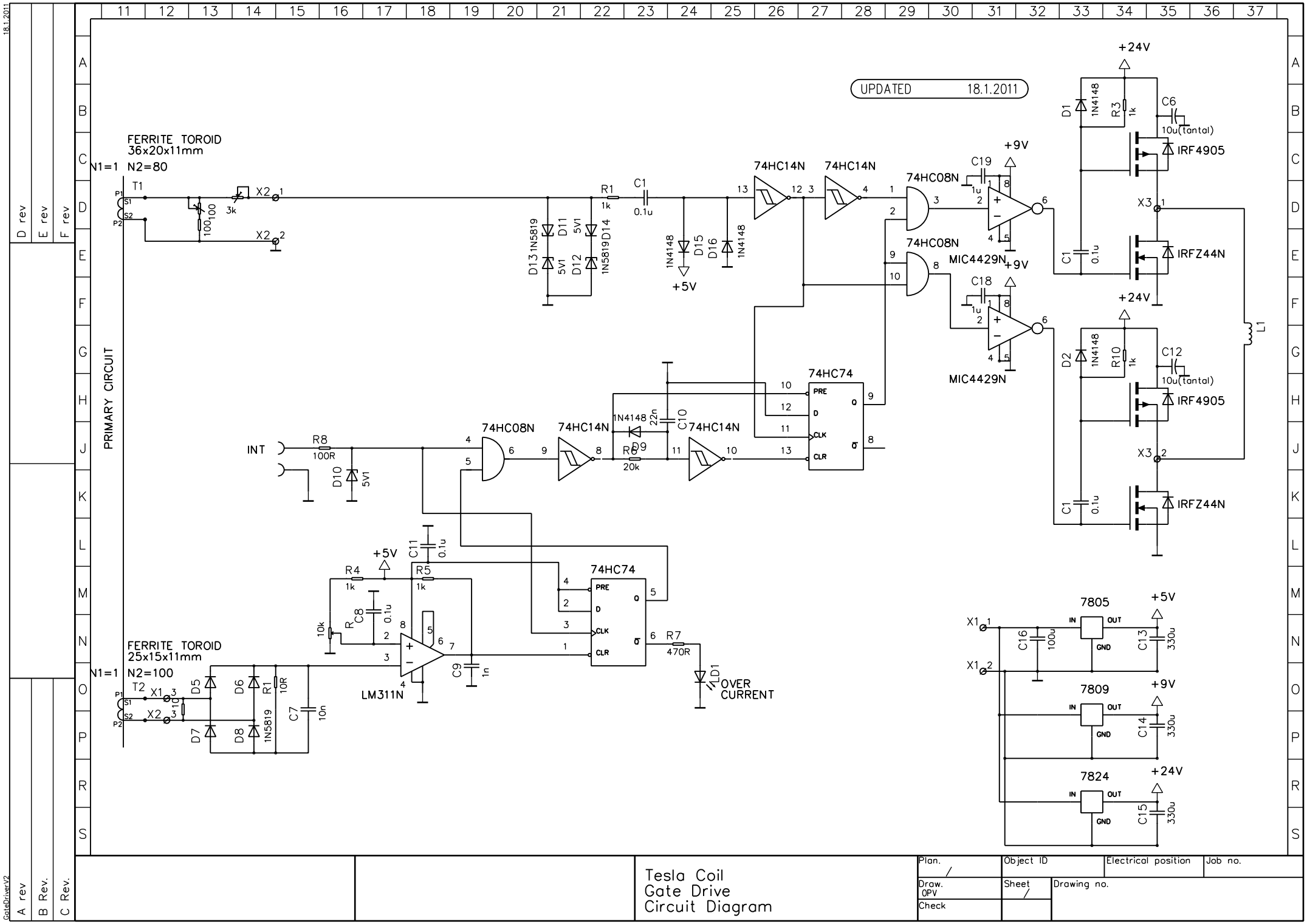
UPDATED 18.1.2011
FERRITE TOROID
36x20x11mm
N1=1 N2=80
T1
PRIMARY CIRCUIT
X2
3k
100
R1
1k
C1
0.1u
D13 1N5819
D11
5V1
D12
1N5819 D14
1N4148
D15
D16
+5V
74HC14N
74HC08N
C19
1u
+9V
MIC4429N
C18
D1
R3
C6
10u(tantal)
IRF4905
IRFZ44N
X3
L1
+24V
D2
R10
C12
INT
R8
100R
D10
5V1
74HC74
PRE
D
CLK
CLR
Q
R6
20k
C10
22n
D9
C11
R4
R5
C8
10k
LM311N
C9
1n
R7
470R
LD1
OVER CURRENT
FERRITE TOROID
25x15x11mm
N1=1 N2=100
T2
X1
D5
D6
D7
D8
R1
10R
C7
10n
7805
7809
7824
IN
OUT
GND
C16
100u
C13
330u
C14
C15
Tesla Coil
Gate Drive
Circuit Diagram
Plan.
Object ID
Electrical position
Job no.
Draw.
OPV
Sheet
Drawing no.
Check
A rev
B Rev.
C Rev.
D rev
E rev
F rev
GateDriverV2
18.1.2011