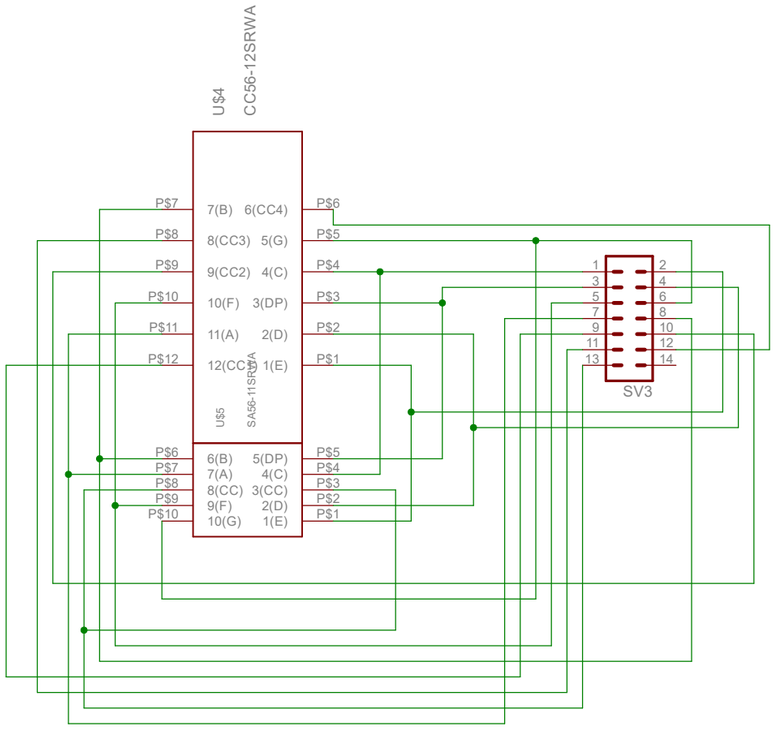

Freqcounter_display
20.3.2014 19:01:07
Sheet: 1/1